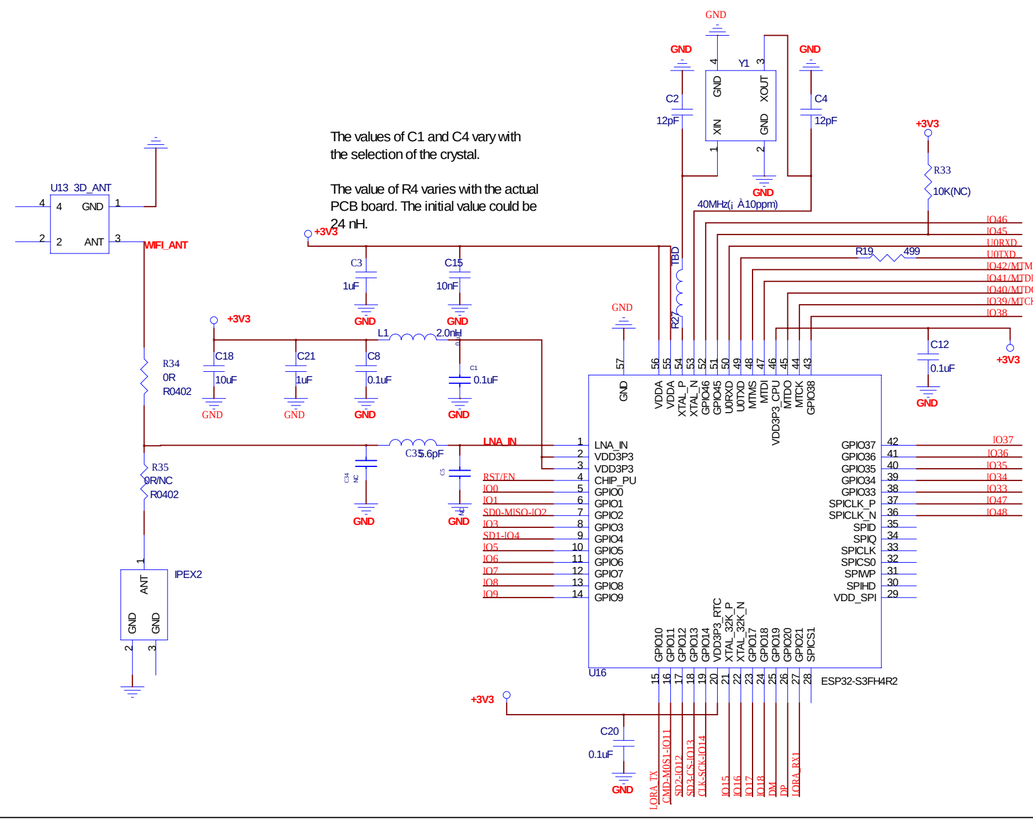

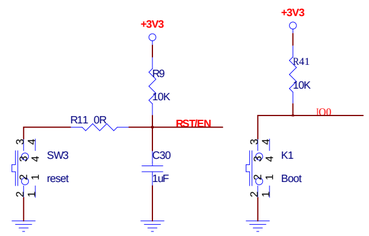

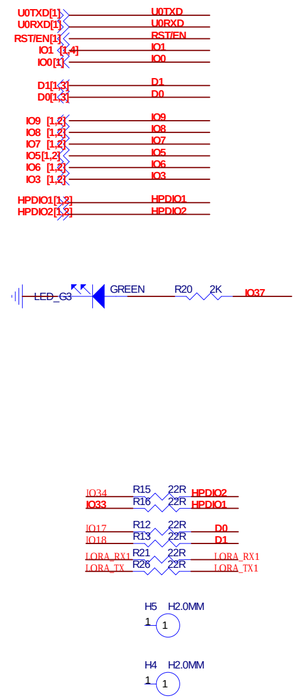

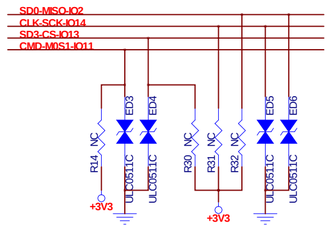

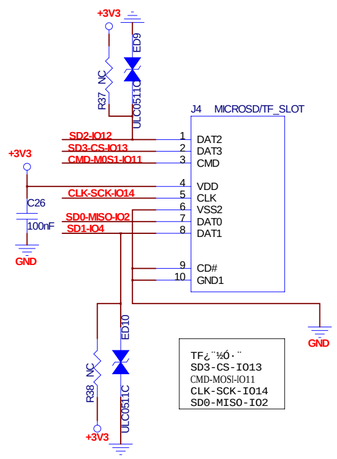

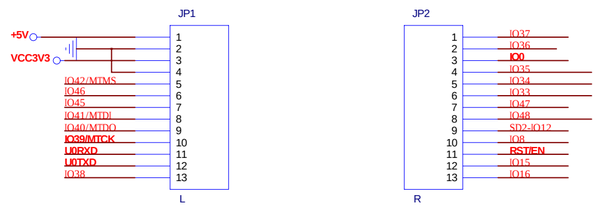

Title	T3S3_V1.0	
Size C	Document Number ESP32-PCIO-D4	Rev V1.0
Date: Friday, January 3, 2020	Sheet 1 of 4	

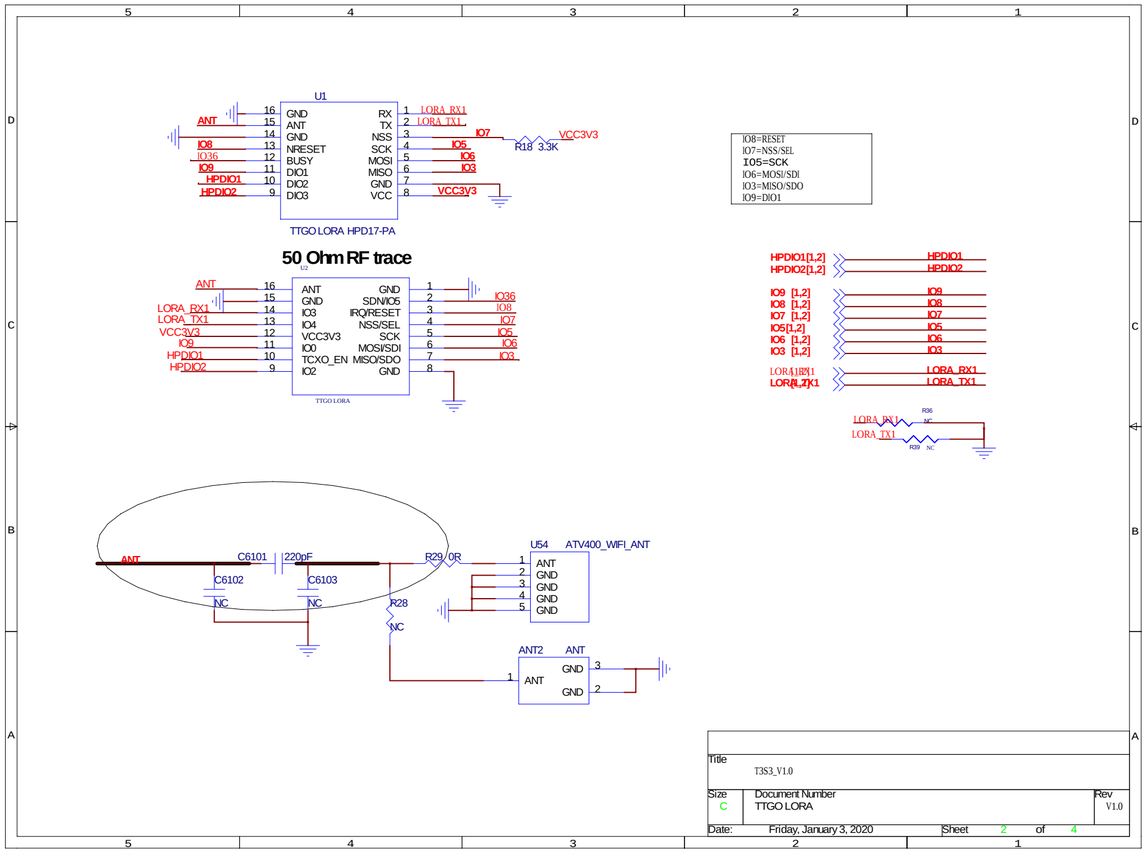
U1
GND
ANT
GND
NRESET
BUSY
DIO1
DIO2
DIO3
RX
TX
NSS
SCK
MOSI
MISO
GND
VCC
ANT
IO8
IO36
IO9
HPDIO1
HPDIO2
LORA_RX1
LORA_TX1
IO7
IO5
IO6
IO3
VCC3V3
R18 3.3K
TTGO LORA HPD17-PA
IO8=RESET
IO7=NSS/SEL
IO5=SCK
IO6=MOSI/SDI
IO3=MISO/SDO
IO9=DIO1
50 Ohm RF trace
U2
ANT
GND
IO3
IO4
VCC3V3
IO0
TCXO_EN
IO2
SDN/IO5
IRQ/RESET
NSS/SEL
SCK
MOSI/SDI
MISO/SDO
IO36
IO8
IO7
IO5
IO6
IO3
TTGO LORA
HPDIO1[1,2]
HPDIO2[1,2]
IO9 [1,2]
IO8 [1,2]
IO7 [1,2]
IO5[1,2]
IO6 [1,2]
IO3 [1,2]
LORA_RX1
LORA_TX1
R36
NC
R39 NC
C6101 220pF
C6102
C6103
NC
R29 0R
R28
U54 ATV400_WIFI_ANT
ANT2
Title
T3S3_V1.0
Size
C
Document Number
TTGO LORA
Rev
V1.0
Date: Friday, January 3, 2020
Sheet 2 of 4

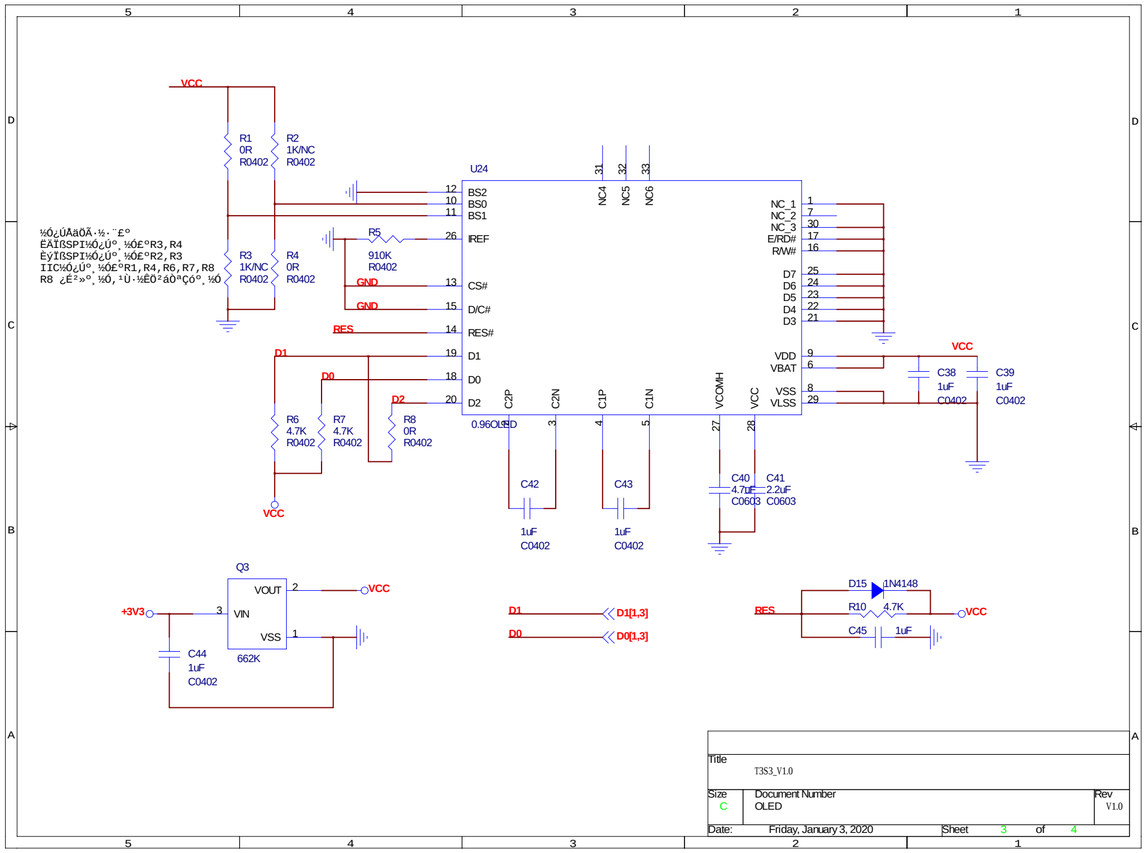

Title	T3S3_V1.0		
Size C	Document Number OLED		Rev V1.0
Date: Friday, January 3, 2020		Sheet 3 of 4	

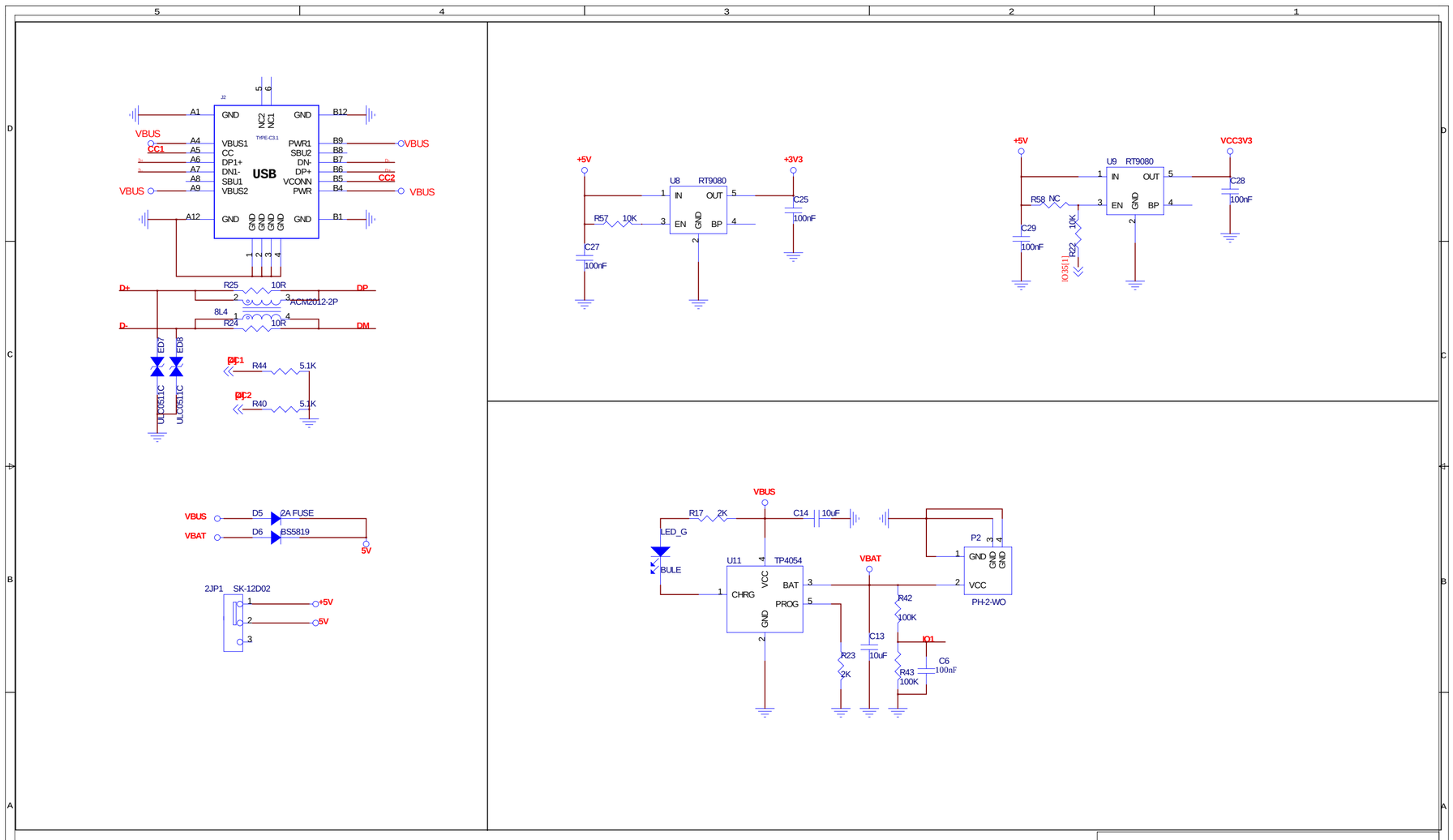

Title	T3S3_V1.0	
Size C	Document Number POWER	Rev V1.0
Date: Friday, January 3, 2020	Sheet 4 of 4	