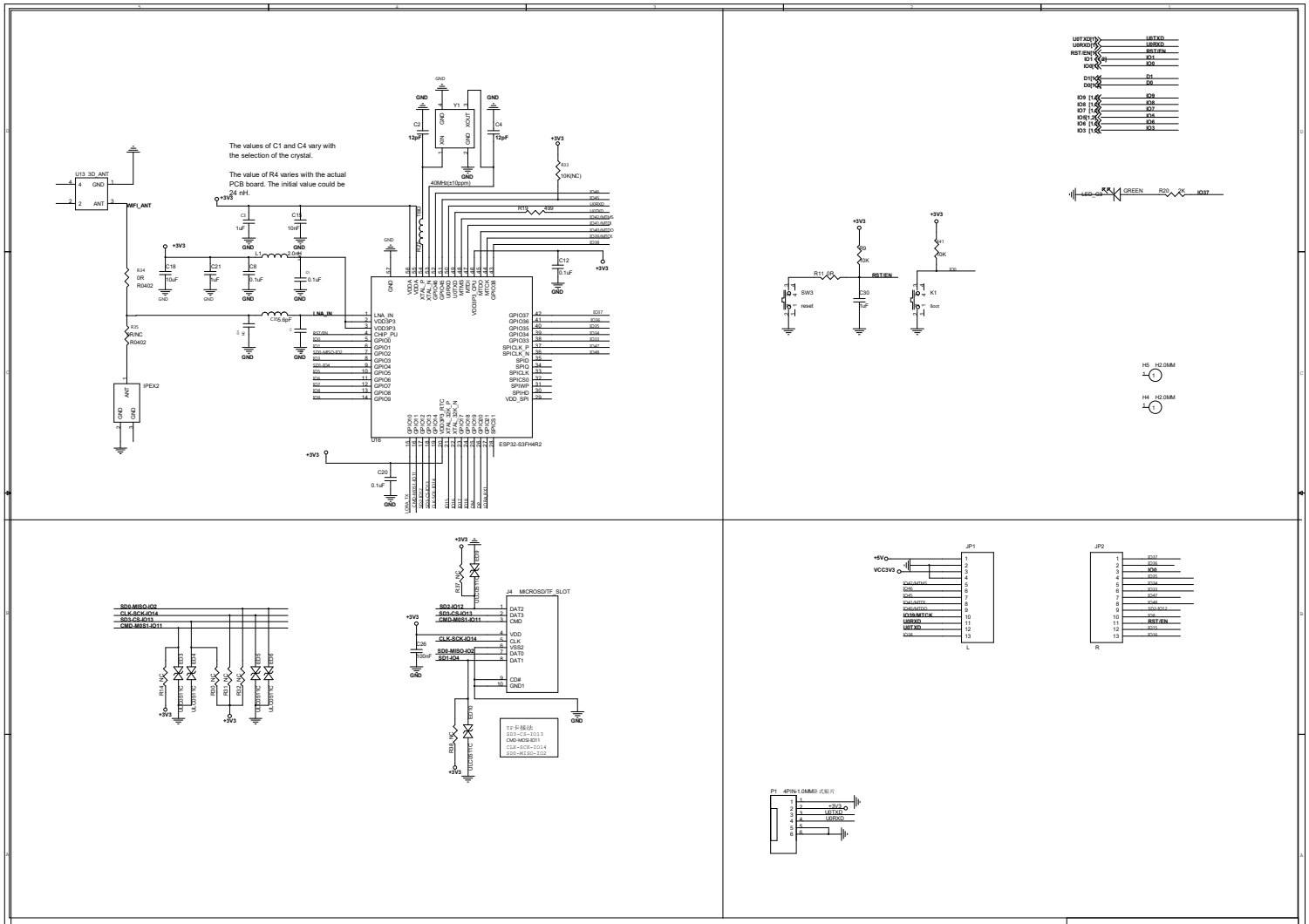

File	T3S3_V1.1
Size C	Document Number ESP32-S3R4R2
Rev	V1.0
Date:	Friday, January 3, 2020
Sheet	1 of 2

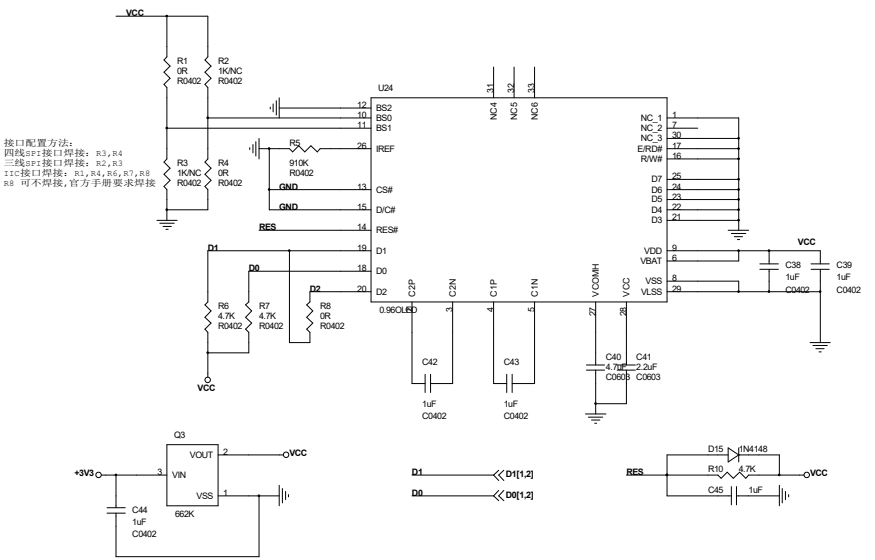

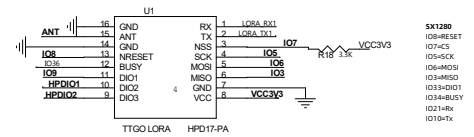

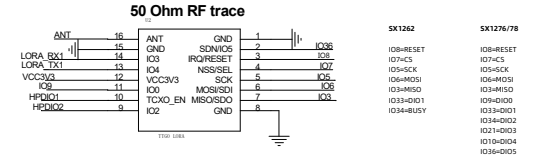

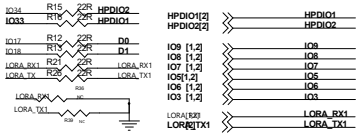

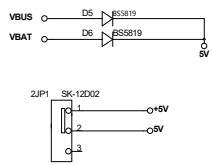

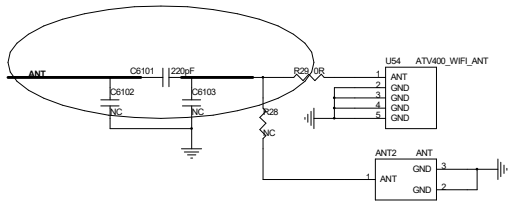

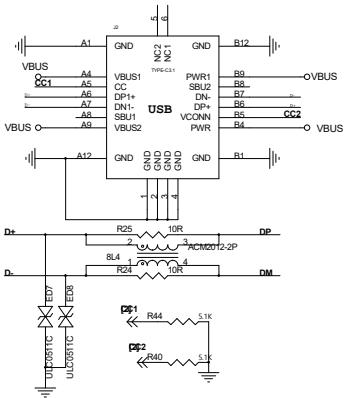

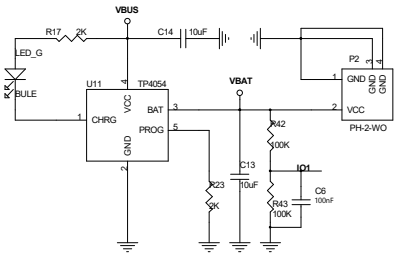

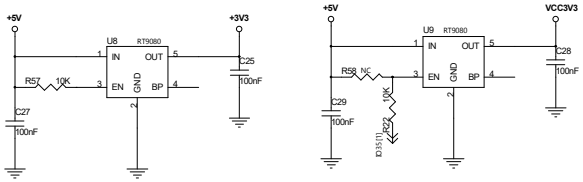

Title	T3S3_V1.1		
Size C	Document Number ESP32-S3FH4R2		Rev V1.0
Date: Friday, January 3, 2020	Sheet 2 of 2		