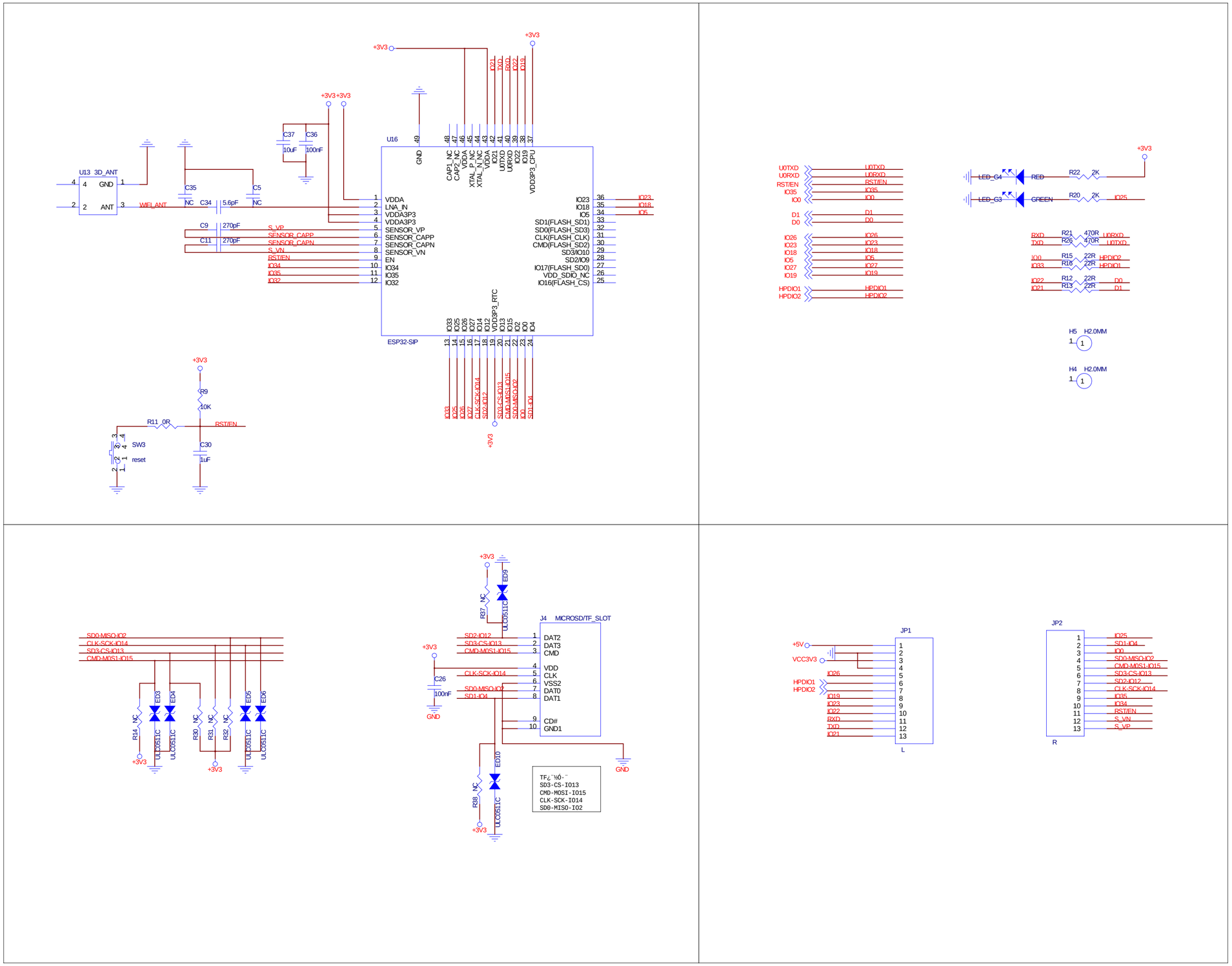

Title	T3_V1.8		
Size C	Document Number ESP32-PCIO-D4		Rev V1.6
Date: Friday, January 3, 2020		Sheet 1 of 4	

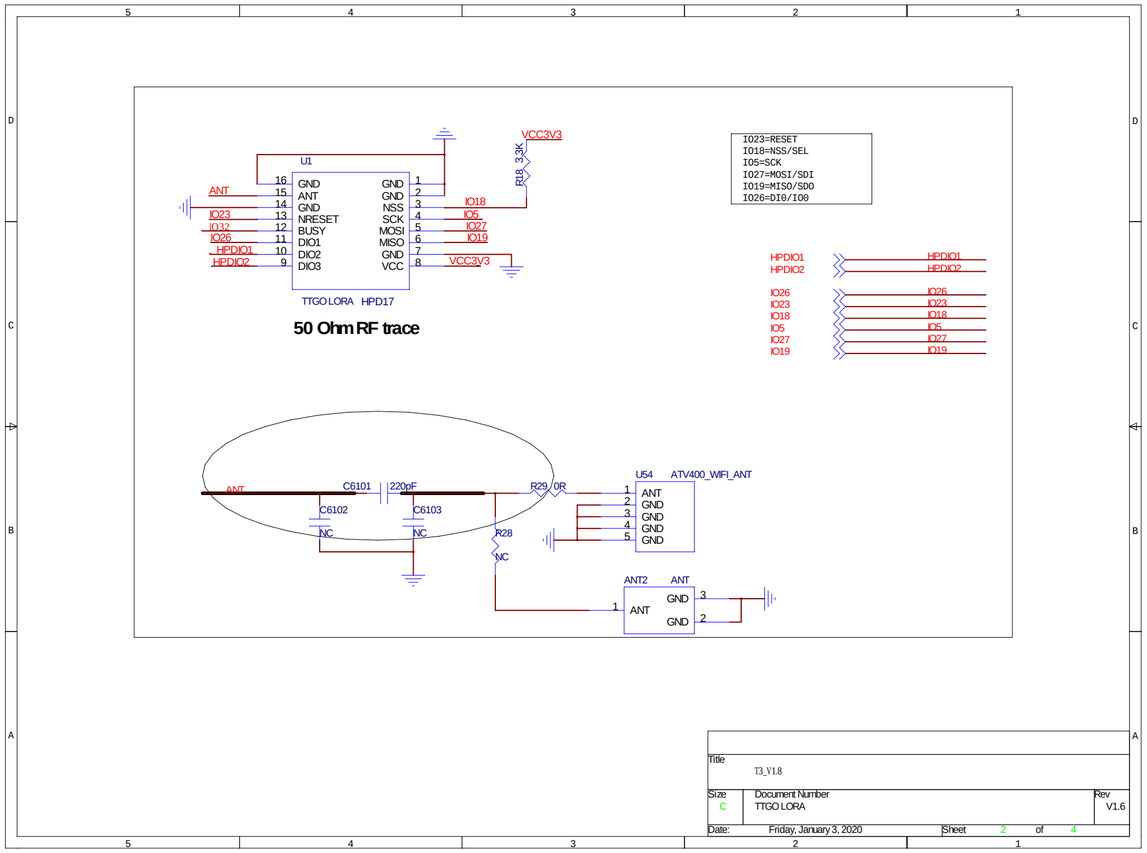

Title	T3_V1.8	
Size C	Document Number TTGO LORA	Rev V1.6
Date: Friday, January 3, 2020	Sheet 2 of 4	

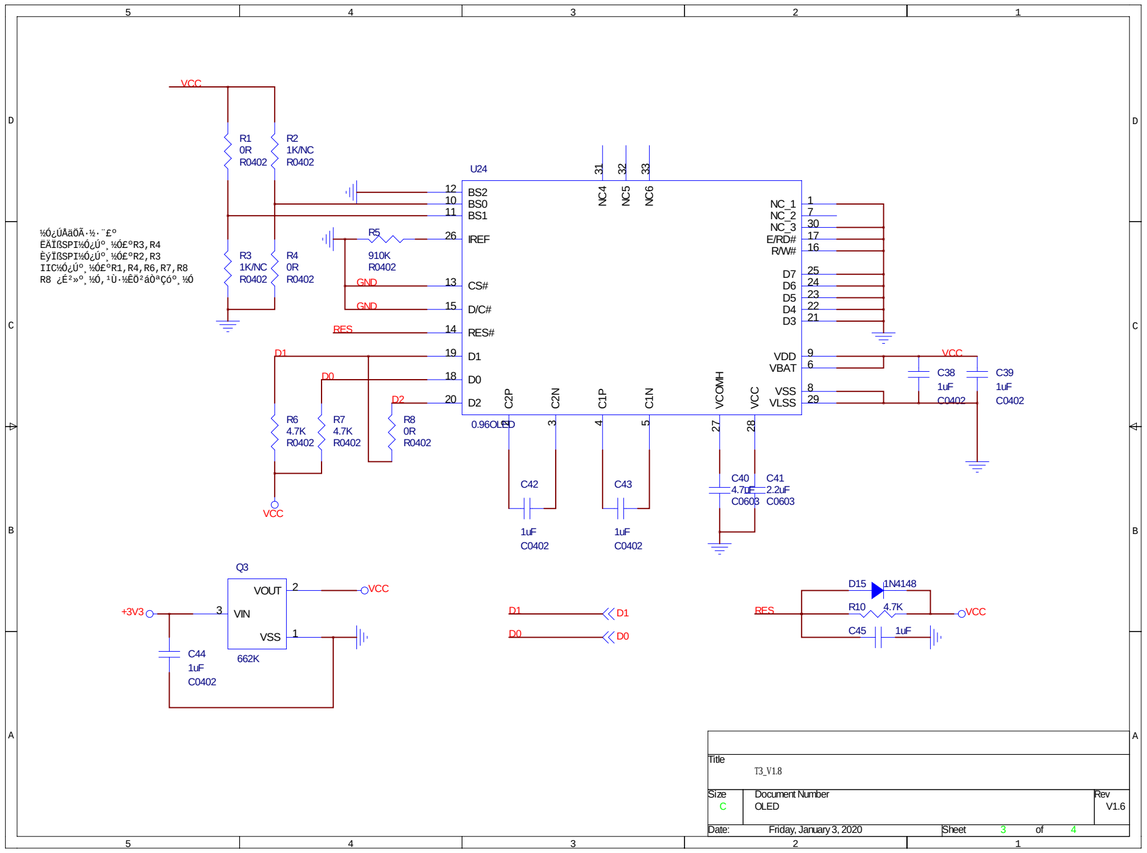

Title
T3_V1.8

Size	Document Number	Rev
C	OLED	V1.6

Date: Friday, January 3, 2020 Sheet 3 of 4

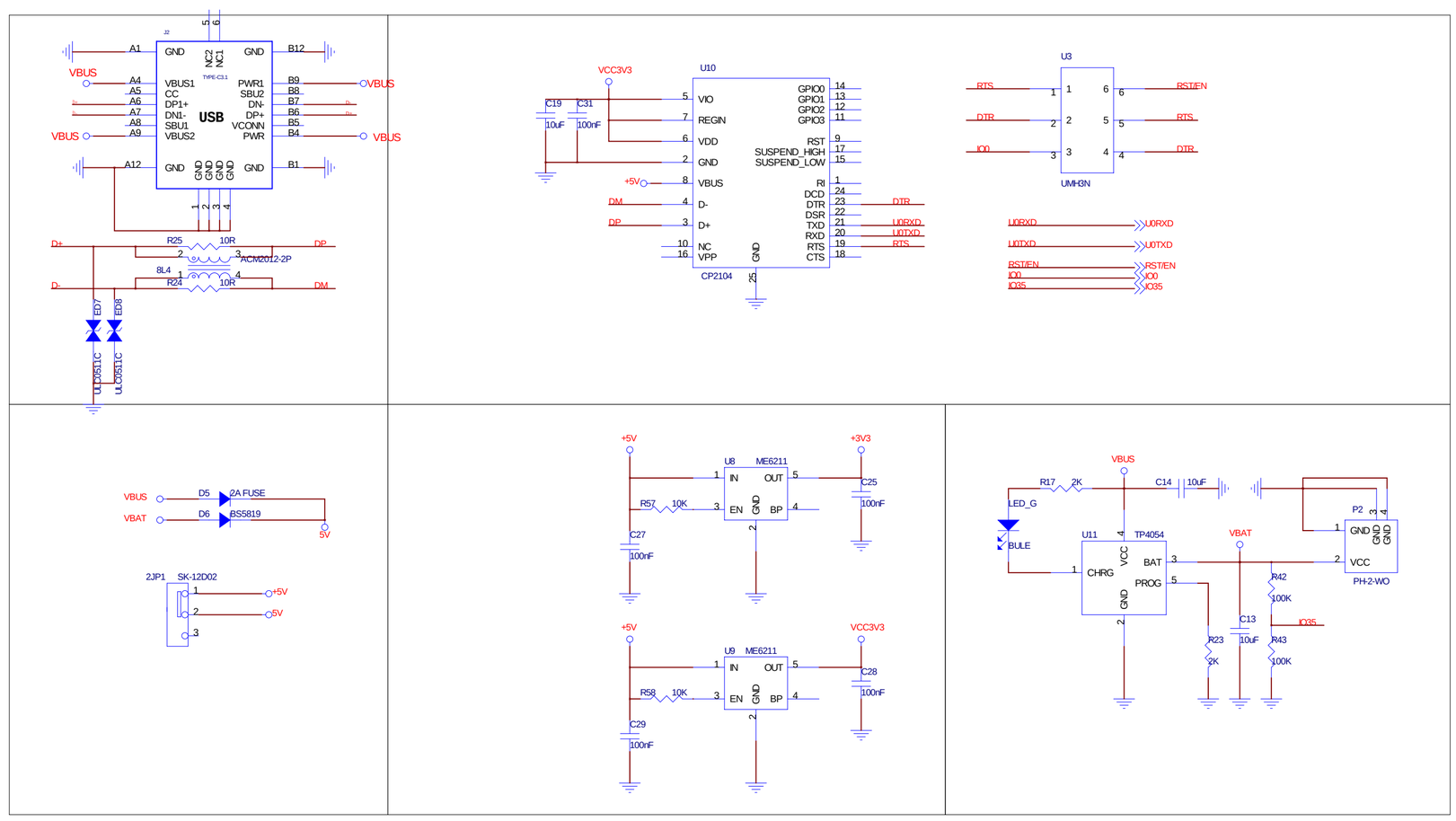

Title	T3_V1.8		
Size C	Document Number POWER		Rev V1.6
Date: Friday, January 3, 2020		Sheet 4 of 4	